Galileo Networking Meeting for Industry

November, 24th- 25th, 2009
São Jose dos Campos, SP, Brazil

Brazil
Vehicle Tracking Presentation

Claudio Luiz **Marte, PhD**
Transport Engineering Dpt (PTR) - EPUSP and IPT Researcher
José **Edgard Soares** Júnior**, Msc, PMP**
IPT Advisor for Vehicle Tracking Systems

Presentation Contents

Year to date

SIMRAV:

- Complimentary law Nº 121, February 9, 2006
- Contran Resolution 245/2007
- System Description

Basic Request for Localization Technology

Year to date

Brazilian Marketing for Vehicle Tracking Systems:

A - I have no insurance and I need a Vehicle Stolen Recovery Service
[Cars, Motorcicles, Cargo Vans and Trucks]

B - In order to have a Insurance cost reduction my Insurance Company requested an AVL installation and tracking service activation.
[Cars, Motorcicles, Cargo Vans and Trucks]

C - In order to make cargo transportation for my customers I have to have AVL system installed and share the on-line information with a contracted Risk Management Company
[Cargo Vans and Trucks]

Year to date

Brazilian Marketing for Vehicle Tracking Systems:

D – Brazilian Fleet

2007Y - 46.8M (Estimated: 2,6% □ 1.2M tracked)

May2009 - 56.3M (Source: Denatran)

E – Number of Tracking Companies associated to Gristec: 70

F – Number of Risk Management Companies associated to Gristec: 22

Gristec – Brazilian Risk Management and Tracking Technology Companies Association. Associação Brasileira das Empresas de Gerenciamento de Risco e Tecnologia de Rastreamento e Monitoramento.

Year to date

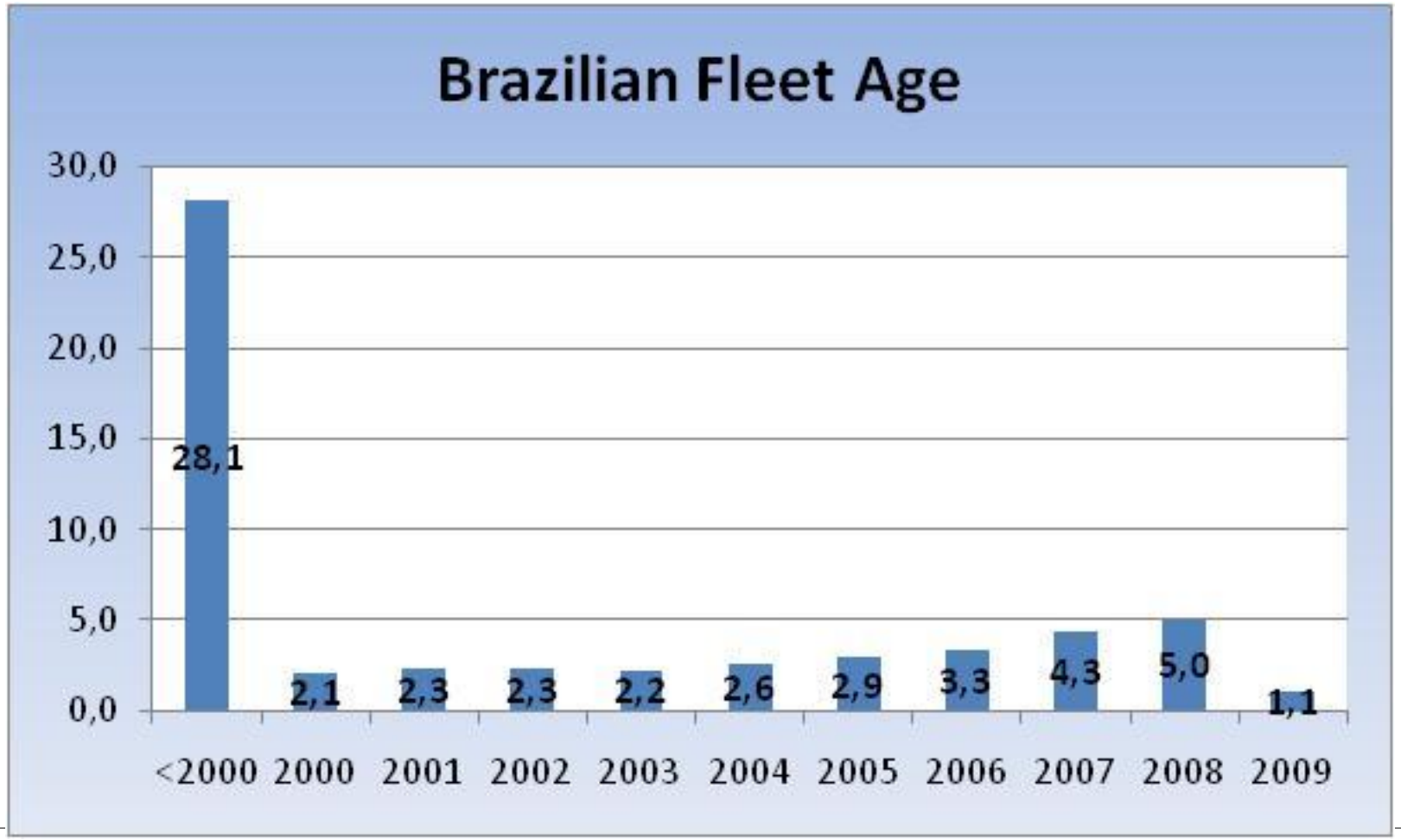

Souce: Denatran
(*) 2009 updated until May

Year to date

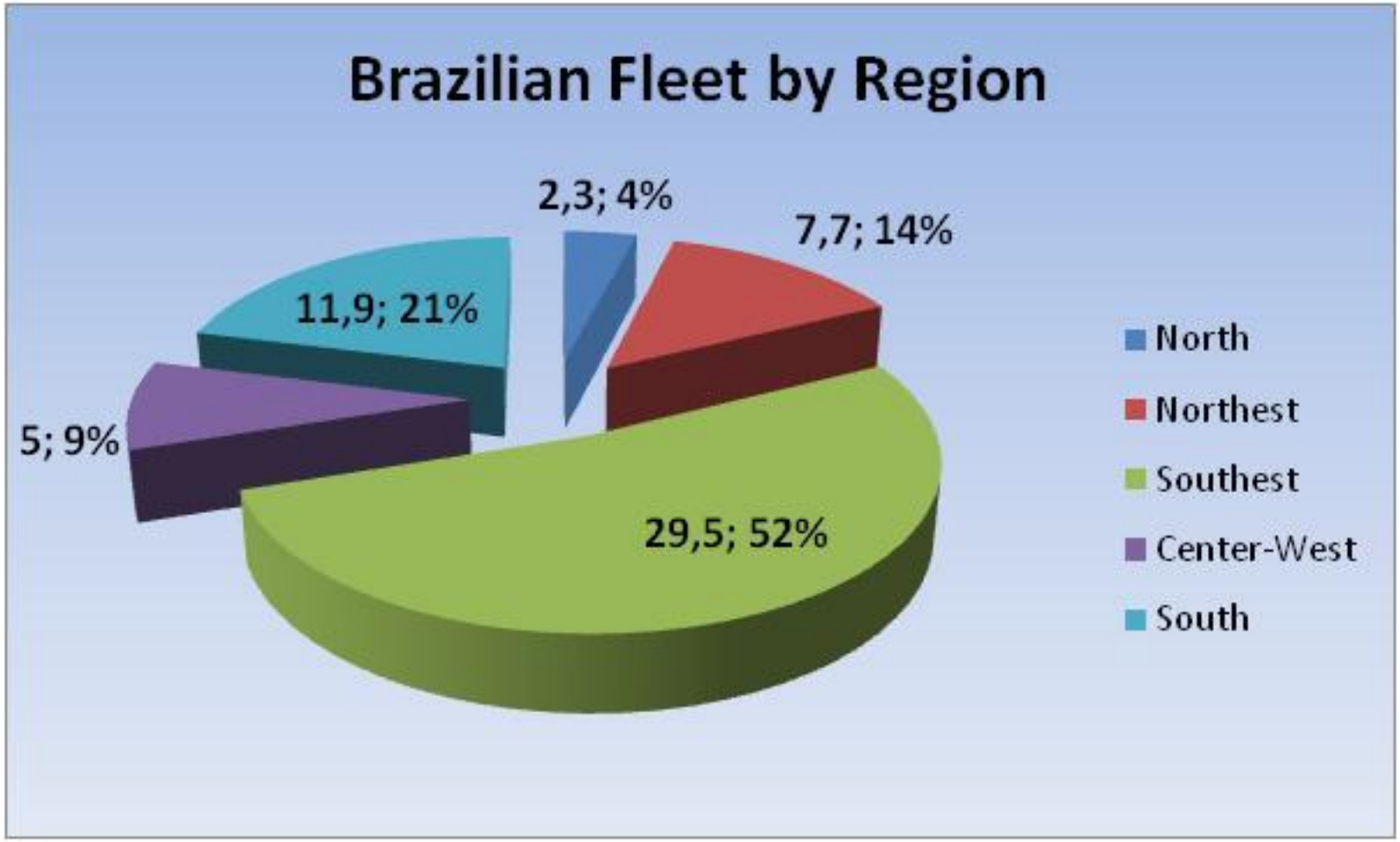

Source: Denatran

SIMRAV

Complementary Law Nº 121, February 9, 2006

It creates the National System for Prevention, Control and Repression of Theft and Robbery of Vehicles and Cargo and other measures.

Contran Resolution 245/2007

Describe the mandatory installation of anti-theft equipment on domestics or foreign new vehicles.

There are others documents that complet the process.

Starting time on February, 2010 progressive growth toward to 100% on December 2010.

Vehicles included: Cars, Motorcycles and Trucks (~5M units/year).

SIMRAV - Project Basic Assumptions

- ✓ **Localization must be done by satelite basis**
  (95% of the time less than 30 meter error).

- ✓ ***Vehicle location is a optional*** **service decided by the vehicle owner. Anyway, 100% of anti-theft equipment must be able to perform the vehicle location function.**

- ✓ **Service activation is a remote process without any action from vehicle owner except to sign the contract.**

PLEASE NOTE:

Some of the following slides were translated from a presentation made by
Antonio Calmon
Coordenador Geral – CGPNE - Denatran/Ministério das Cidades

Anti-Theft Equipament

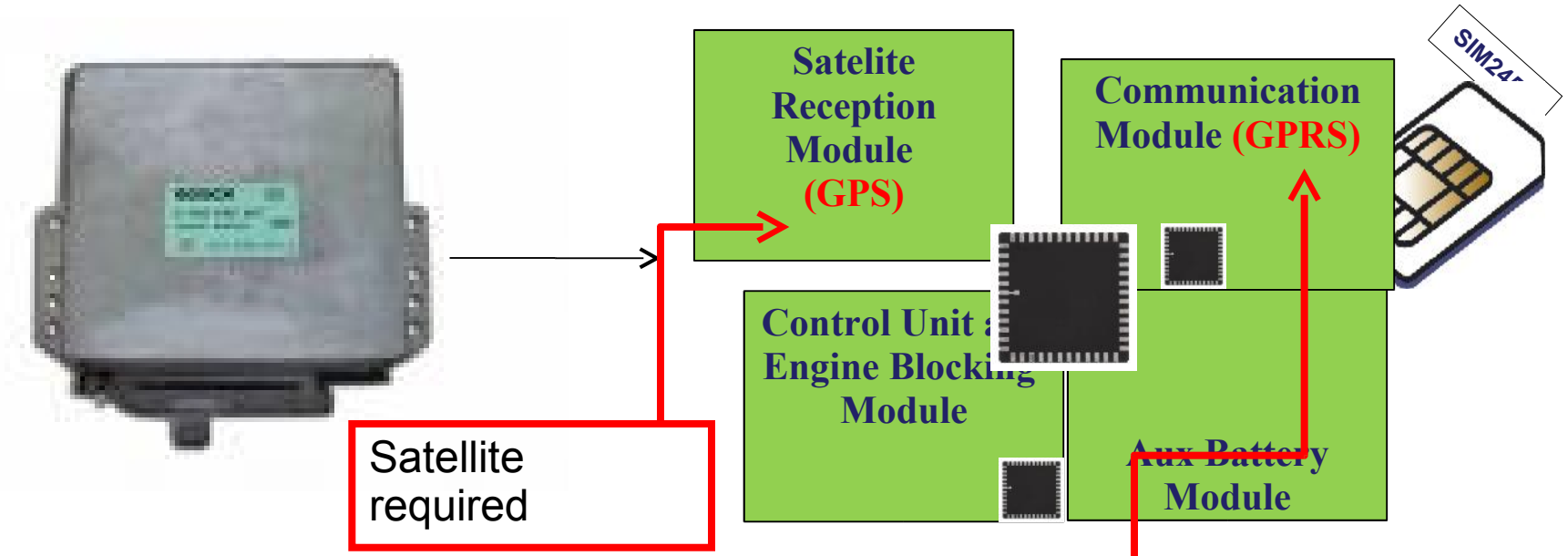

- One Monolitic Equipment with two functions:
  - Vehicle Tracking
  - Engine Blocking Control

Designed based on GPRS Infra-structure

Partners on SIMRAV Project

SIM Card Manufacturer

Services Providers
TIV

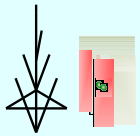

Cellular Operator

DENATRAN

SIMRA
V

Equipment Manufacturer

Insurance Companies and Banks

Car Makers

Car Owners

SIMRAV – System Diagram

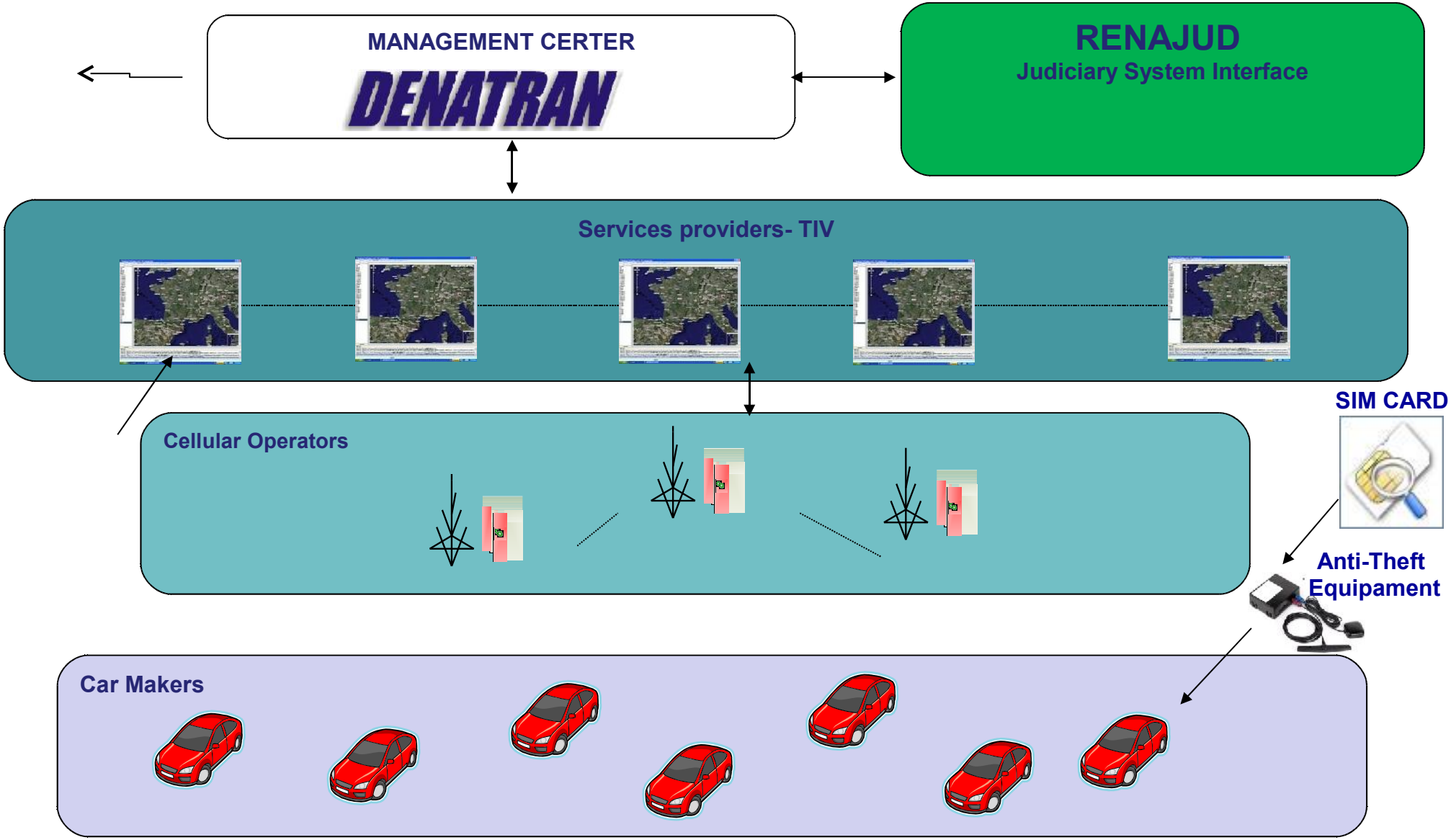

SIMRAV – Full Process

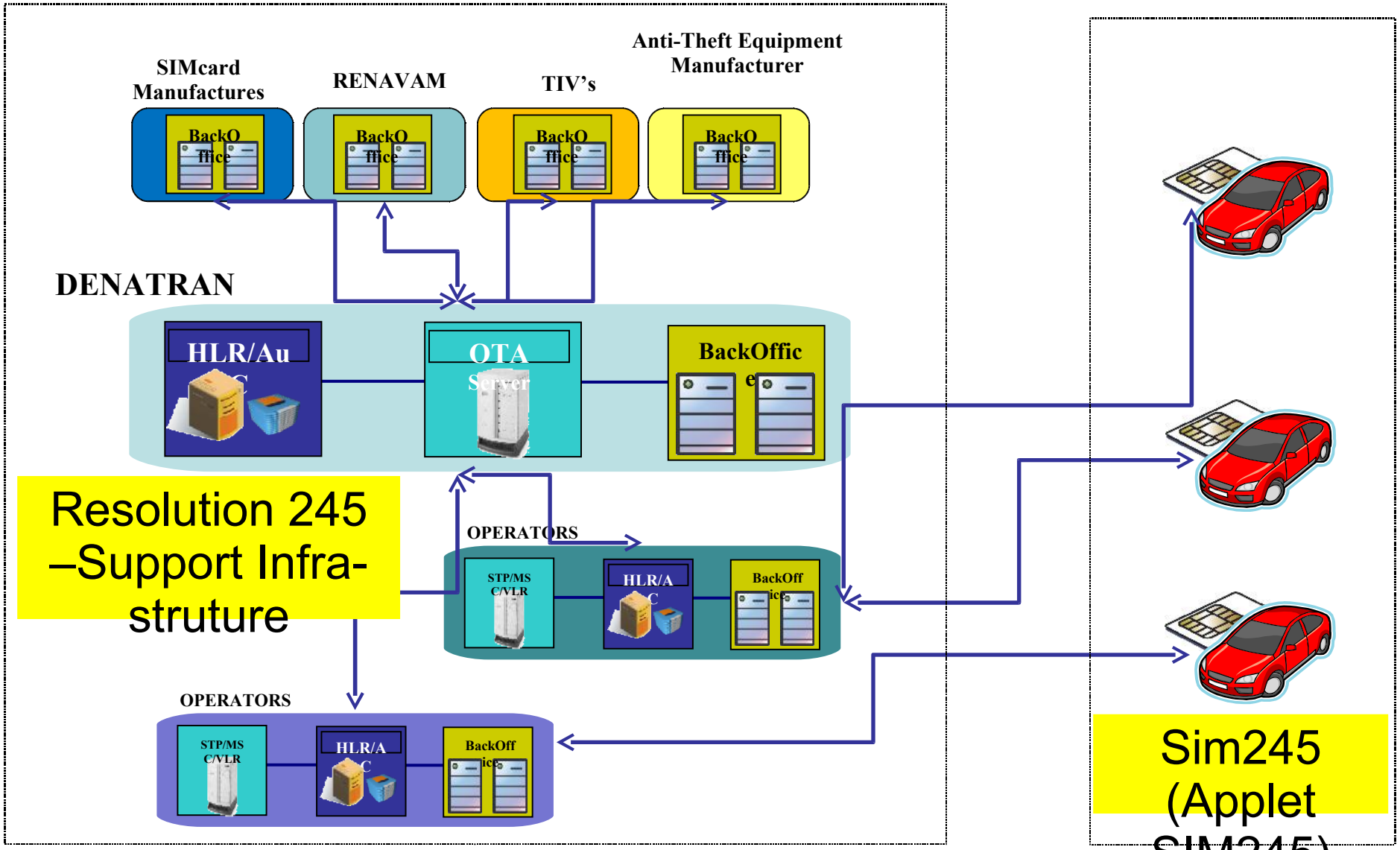

Basic Request for Localization

- ✓ Fast Cold and warm start
- ✓ Low Cost
- ✓ Accuracy
- ✓ Easy and “cheap” to install

Thank You